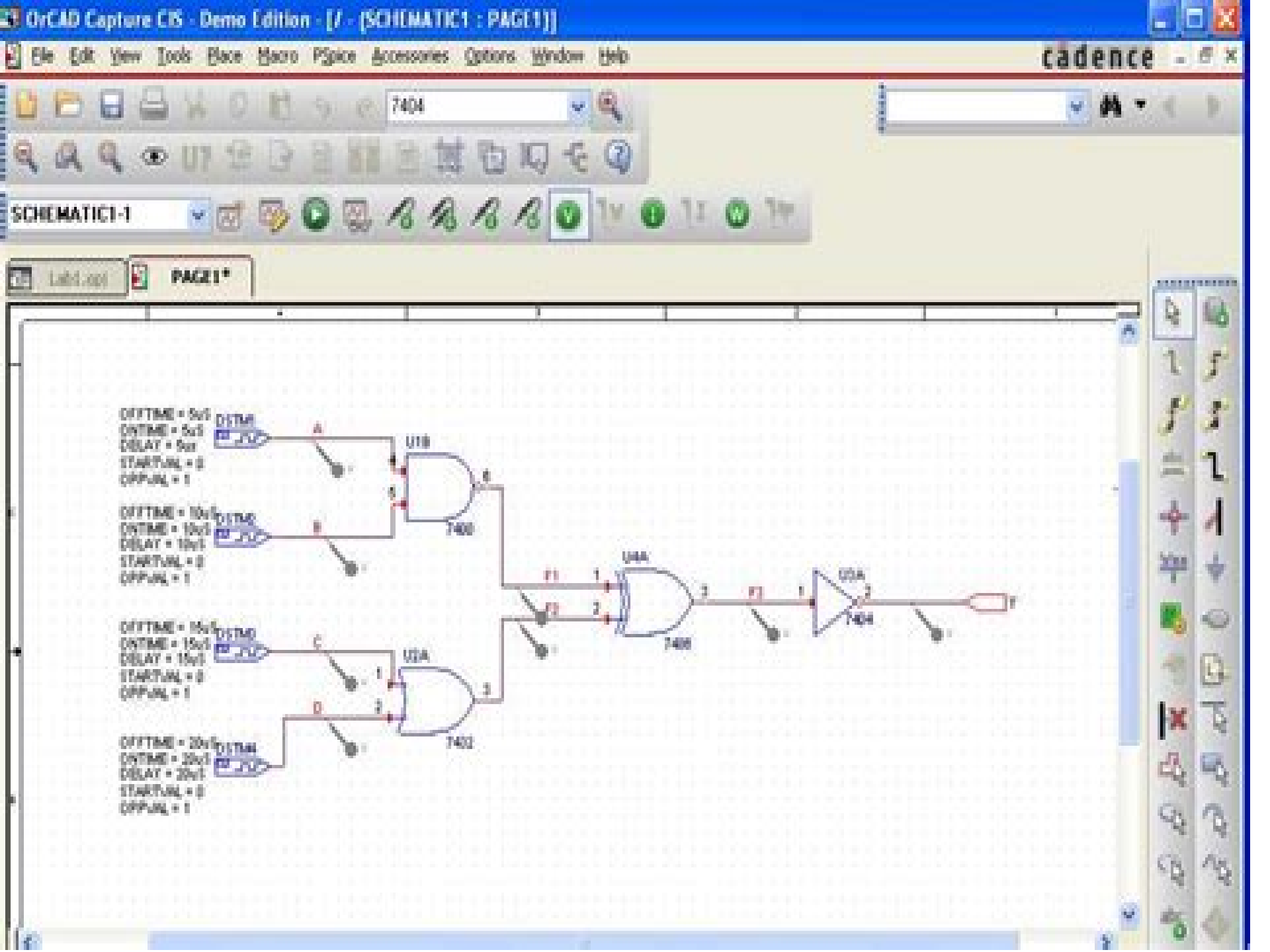
OrCAD Capture CIS - Demo Edition - [/ - (SCHEMATIC1 : PAGE1)]
File Edit View Tools Place Macro PSpice Accessories Options Window Help
cadence
7404
SCHEMATIC1-1
PAGE1*
U1B
7400
U2A
7402
U4A
7408
U3A
7404

Schematic Capture With Cadence Pspice

M. H. Rashid

Schematic Capture With Cadence Pspice:

Schematic Capture with Cadence PSpice Marc E. Herniter,2003 CD ROM contains Orcad Lite 9 2 Circuit files used in text *Analog Design and Simulation Using OrCAD Capture and PSpice* Dennis Fitzpatrick,2017-12-11 New to this edition Updated to using OrCAD Release 17 2 and its new features Coverage of PSPICE extra features PSpice Designer PSpice Designer Plus Modelling Application PSpice Part Search Symbol Viewer PSpice Report Associate PSpice model New delay functions for Behavioural Simulation Models New Models Support for negative values in hysteresis voltage and threshold voltage A new chapter on PSpice Advanced Analysis Analog Design and Simulation Using OrCAD Capture and PSpice Second Edition provides step by step instructions on how to use the Cadence OrCAD family of Electronic Design Automation software for analog design and simulation The book explains how to enter schematics in Capture set up project types project libraries and prepare circuits for PSpice simulation There are chapters on the different analysis types for DC Bias point DC sweep AC frequency sweep Parametric analysis Temperature analysis Performance Analysis Noise analysis Sensitivity and Monte Carlo simulation Subsequent chapters explain how the Stimulus Editor is used to define custom analog and digital signals how the Model Editor is used to view and create new PSpice models and Capture parts and how the Magnetic Parts Editor is used to design transformers and inductors Other chapters include Analog Behaviorial models Test Benches as well as how to create hierarchical designs The book includes the latest features in the OrCAD 17 2 release and there are exercises with step by step instructions at the end of each chapter that enables the reader to progress based upon their experience and knowledge gained from previous chapters The author worked for Cadence for over eight years and supported and delivered OrCAD PSpice training courses all over Europe This book has been endorsed by Cadence In addition there are new chapters on the PSpice Advanced Analysis suite of tools Sensitivity Analysis Optimizer Monte Carlo and Smoke Analysis The chapters show how circuit performance can effectively be maximised and optimised for variations in component tolerances temperature effects manufacturing yields and component stress Provides both a comprehensive user guide and a detailed overview of simulation using OrCAD Capture and PSpice Includes worked and ready to try sample designs and a wide range of to do exercises Covers Capture and PSpice together **SPICE and LTspice for Power Electronics and Electric Power** Muhammad H. Rashid,2024-11-13 Power electronics can be a difficult course for students to understand and for professional professors to teach simplifying the process for both LTspice for power electronics and electrical power edition illustrates methods of integrating industry standard LTspice software for design verification and as a theoretical laboratory bench Helpful LTspice software and Program Files Available for Download Based on the author Muhammad H Rashid s considerable experience merging design content and SPICE into a power electronics course this vastly improved and updated edition focuses on helping readers integrate the LTspice simulator with a minimum amount of time and effort Giving users a better understanding of the operation of a power electronic circuit the author explores the transient behavior of current and voltage

waveforms for every circuit element at every stage The book also includes examples of common types of power converters as well as circuits with linear and nonlinear inductors New in this edition Changes to run on OrCAD SPICE or LTspice IV or higher Students learning outcomes SLOs listed at the start of each chapter Abstracts of chapters List the input side and output side performance parameters of the converters The characteristics of power semiconductors diodes BJTs MOSFETs and IGBTs Generating PWM and sinusoidal PWM gating signals Evaluating the power efficiency of converters Monte Carlo analysis of converters Worst case analysis of converters Nonlinear transformer model Evaluate user defined electrical quantities MEASURE This book demonstrates techniques for executing power conversion and ensuring the quality of output waveform rather than the accurate modeling of power semiconductor devices This approach benefits students enabling them to compare classroom results obtained with simple switch models of devices **SPICE for Power Electronics and Electric Power** Muhammad H. Rashid,2017-12-19 Power electronics can be a difficult course for students to understand and for professors to teach Simplifying the process for both SPICE for Power Electronics and Electric Power Third Edition illustrates methods of integrating industry standard SPICE software for design verification and as a theoretical laboratory bench Helpful PSpice Software and Program Files Available for Download Based on the author Muhammad H Rashid s considerable experience merging design content and SPICE into a power electronics course this vastly improved and updated edition focuses on helping readers integrate the SPICE simulator with a minimum amount of time and effort Giving users a better understanding of the operation of a power electronics circuit the author explores the transient behavior of current and voltage waveforms for each and every circuit element at every stage The book also includes examples of all types of power converters as well as circuits with linear and nonlinear inductors New in this edition Student learning outcomes SLOs listed at the start of each chapter Changes to run on OrCAD version 9 2 Added VPRINT1 and IPRINT1 commands and examples Notes that identify important concepts Examples illustrating EVALUE GVALUE ETABLE GTABLE ELAPLACE GLAPLACE EFREQ and GFREQ Mathematical relations for expected outcomes where appropriate The Fourier series of the output voltages for rectifiers and inverters PSpice simulations of DC link inverters and AC voltage controllers with PWM control This book demonstrates techniques of executing power conversions and ensuring the quality of the output waveforms rather than the accurate modeling of power semiconductor devices This approach benefits students enabling them to compare classroom results obtained with simple switch models of devices In addition a new chapter covers multi level converters Assuming no prior knowledge of SPICE or PSpice simulation the text provides detailed step by step instructions on how to draw a schematic of a circuit execute simulations and view or plot the output results It also includes suggestions for laboratory experiments and design problems that can be used for student homework assignments Continuous System Simulation François E. Cellier,Ernesto Kofman,2006-03-15 Highly computer oriented text introducing numerical methods and algorithms along with the applications and conceptual tools Includes homework problems suggestions for research projects and open

ended questions at the end of each chapter Written by our successful author who also wrote Continuous System Modeling a best selling Springer book first published in the 1991 sold about 1500 copies *Electric Circuits and Signals* Nassir H. Sabah,2017-12-19 Solving circuit problems is less a matter of knowing what steps to follow than why those steps are necessary And knowing the why stems from an in depth understanding of the underlying concepts and theoretical basis of electric circuits Setting the benchmark for a modern approach to this fundamental topic Nassir Sabah s Electric Circuits and Signals supplies a comprehensive intuitive conceptual and hands on introduction with an emphasis on creative problem solving A Professional Education Ideal for electrical engineering majors as a first step this phenomenal textbook also builds a core knowledge in the basic theory concepts and techniques of circuit analysis behavior and operation for students following tracks in such areas as computer engineering communications engineering electronics mechatronics electric power and control systems The author uses hundreds of case studies examples exercises and homework problems to build a strong understanding of how to apply theory to problems in a variety of both familiar and unfamiliar contexts Your students will be able to approach any problem with total confidence Coverage ranges from the basics of dc and ac circuits to transients energy storage elements natural responses and convolution two port circuits Laplace and Fourier transforms signal processing and operational amplifiers Modern Tools for Tomorrow s Innovators Along with a conceptual approach to the material this truly modern text uses PSpice simulations with schematic Capture as well as MATLAB commands to give students hands on experience with the tools they will use after graduation Classroom Extras When you adopt Electric Circuits and Signals you will receive a complete solutions manual along with its companion CD ROM supplying additional material The CD contains a WordTM file for each chapter providing bulleted condensed text and figures that can be used as class slides or lecture notes Electronic Circuits with MATLAB, PSpice, and Smith Chart Won Y. Yang,Jaekwon Kim,Kyung W. Park,Donghyun Baek,Sungjoon Lim,Jingon Joung,Suhyun Park,Han L. Lee,Woo June Choi,Taeho Im,2020-01-15 Provides practical examples of circuit design and analysis using PSpice MATLAB and the Smith Chart This book presents the three technologies used to deal with electronic circuits MATLAB PSpice and Smith chart It gives students researchers and practicing engineers the necessary design and modelling tools for validating electronic design concepts involving bipolar junction transistors BJTs field effect transistors FET OP Amp circuits and analog filters Electronic Circuits with MATLAB PSpice and Smith Chart presents analytical solutions with the results of MATLAB analysis and PSpice simulation This gives the reader information about the state of the art and confidence in the legitimacy of the solution as long as the solutions obtained by using the two software tools agree with each other For representative examples of impedance matching and filter design the solution using MATLAB and Smith chart Smith V4 1 are presented for comparison and crosscheck This approach is expected to give the reader confidence in and a deeper understanding of the solution In addition this text Increases the reader s understanding of the underlying processes and related equations for the design and analysis of

circuits Provides a stepping stone to RF radio frequency circuit design by demonstrating how MATLAB can be used for the design and implementation of microstrip filters Features two chapters dedicated to the application of Smith charts and two port network theory Electronic Circuits with MATLAB PSpice and Smith Chart will be of great benefit to practicing engineers and graduate students interested in circuit theory and RF circuits **Complete PCB Design Using OrCAD Capture and PCB Editor** Kraig Mitzner,Bob Doe,Alexander Akulin,Anton Suponin,Dirk Müller,2019-06-20 Complete PCB Design Using OrCAD Capture and PCB Editor Second Edition provides practical instruction on how to use the OrCAD design suite to design and manufacture printed circuit boards Chapters cover how to Design a PCB using OrCAD Capture and OrCAD PCB Editor adding PSpice simulation capabilities to a design how to develop custom schematic parts how to create footprints and PSpice models and how to perform documentation simulation and board fabrication from the same schematic design This book is suitable for both beginners and experienced designers providing basic principles and the program s full capabilities for optimizing designs Companion sitehttps www elsevier com books and journals book companion 9780128176849 Presents a fully updated edition on OrCAD Capture Version 17 2 Combines the theoretical and practical parts of PCB design Includes real life design examples that show how and why designs work providing a comprehensive toolset for understanding OrCAD software Provides the exact order in which a circuit and PCB are designed Introduces the IPC JEDEC and IEEE standards relating to PCB design *Introduction to PSpice Using OrCAD for Circuits and Electronics* M. H. Rashid,2004 This book uses a top down approach to introduce readers to the SPICE simulator It begins by describing techniques for simulating circuits then presents the various SPICE and OrCAD commands and their applications to electrical and electronic circuits Lavishly illustrated this new edition includes even more hands on exercises suggestions sample problems and circuit models of actual devices It is an ideal supplement for courses in electric or electronic circuitry and is also a solid professional reference BOOK JACKET Title Summary field provided by Blackwell North America Inc All Rights Reserved **Electronics** Nassir H. Sabah,2017-12-19 Electronics Basic Analog and Digital with PSpice does more than just make unsubstantiated assertions about electronics Compared to most current textbooks on the subject it pays significantly more attention to essential basic electronics and the underlying theory of semiconductors In discussing electrical conduction in semiconductors the author addresses the important but often ignored fundamental and unifying concept of electrochemical potential of current carriers which is also an instructive link between semiconductor and ionic systems at a time when electrical engineering students are increasingly being exposed to biological systems The text presents the background and tools necessary for at least a qualitative understanding of new and projected advances in microelectronics The author provides helpful PSpice simulations and associated procedures based on schematic capture and using OrCAD 16 0 Demo software which are available for download These simulations are explained in considerable detail and integrated throughout the book The book also includes practical real world examples problems and other supplementary material which helps to demystify

concepts and relations that many books usually state as facts without offering at least some plausible explanation With its focus on fundamental physical concepts and thorough exploration of the behavior of semiconductors this book enables readers to better understand how electronic devices function and how they are used The book s foreword briefly reviews the history of electronics and its impact in today s world Classroom Presentations are provided on the CRC Press website Their inclusion eliminates the need for instructors to prepare lecture notes The files can be modified as may be desired projected in the classroom or lecture hall and used as a basis for discussing the course material *PSpice for Filters and Transmission Lines* Paul Tobin,2022-05-31 In this book PSpice for Filters and Transmission Lines we examine a range of active and passive filters where each design is simulated using the latest Cadence Orcad V10 5 PSpice capture software These filters cannot match the very high order digital signal processing DSP filters considered in PSpice for Digital Signal Processing but nevertheless these filters have many uses The active filters considered were designed using Butterworth and Chebychev approximation loss functions rather than using the cookbook approach so that the final design will meet a given specification in an exacting manner Switched capacitor filter circuits are examined and here we see how useful PSpice Probe is in demonstrating how these filters filter as it were Two port networks are discussed as an introduction to transmission lines and using a series of problems we demonstrate quarter wave and single stub matching The concept of time domain reflectrometry as a fault location tool on transmission lines is then examined In the last chapter we discuss the technique of importing and exporting speech signals into a PSpice schematic using a tailored made program Wav2ascii This is a novel technique that greatly extends the simulation boundaries of PSpice Various digital circuits are also examined at the end of this chapter to demonstrate the use of the bus structure and other techniques **Introduction to Electric Circuits** Richard C. Dorf,James A. Svoboda,2010-01-07 The central theme of Introduction to Electric Circuits is the concept that electric circuits are a part of the basic fabric of modern technology Given this theme this book endeavors to show how the analysis and design of electric circuits are inseparably intertwined with the ability of the engineer to design complex electronic communication computer and control systems as well as consumer products This book is designed for a one to three term course in electric circuits or linear circuit analysis and is structured for maximum flexibility Analysis of Multiconductor Transmission Lines Clayton R. Paul,2007-10-26 The essential textbook for electrical engineering students and professionals now in a valuable new edition The increasing use of high speed digital technology requires that all electrical engineers have a working knowledge of transmission lines However because of the introduction of computer engineering courses into already crowded four year undergraduate programs the transmission line courses in many electrical engineering programs have been relegated to a senior technical elective if offered at all Now Analysis of Multiconductor Transmission Lines Second Edition has been significantly updated and reorganized to fill the need for a structured course on transmission lines in a senior undergraduate or graduate level electrical engineering program In this new edition each broad analysis topic

e g per unit length parameters frequency domain analysis time domain analysis and incident field excitation now has a chapter concerning two conductor lines followed immediately by a chapter on MTLs for that topic This enables instructors to emphasize two conductor lines or MTLs or both In addition to the reorganization of the material this Second Edition now contains important advancements in analysis methods that have developed since the previous edition such as methods for achieving signal integrity SI in high speed digital interconnects the finite difference time domain FDTD solution methods and the time domain to frequency domain transformation TDFD method Furthermore the content of Chapters 8 and 9 on digital signal propagation and signal integrity application has been considerably expanded upon to reflect all of the vital information current and future designers of high speed digital systems need to know **Circuit Systems with MATLAB and PSpice** Won Y. Yang,2012-03-02 1 Instead of the conventional method using the general particular solutions to solve differential equations for the circuits containing inductors capacitors this book lays emphasis on the Laplace transform method for solving differential equations We recommend taking the Laplace transform of electric circuits containing inductors capacitors and setting up the transformed circuit equations directly in the unified framework as if they were just made of resistors and sources rather than setting up the circuit equations in the form of differential equations and then taking their Laplace transforms to solve them The Laplace transform and the inverse Laplace transform are introduced in the Appendix 2 This book presents several MATLAB programs that can be used to get the Laplace transformed solutions take their inverse Laplace transforms and plot the solutions along the time or frequency axis The MATLAB programs can save a lot of time and effort for obtaining the solutions in the time domain or frequency domain so that readers can concentrate on establishing circuit equations gaining insights to the problems and making observations interpretations of the solutions 3 This book also introduces step by step how to use OrCAD PSpice for circuit simulations For circuit problems taking much time to solve by hand the readers are recommended to use MATLAB and PSpice This approach gives the readers not only information about the state of the art but also self confidence on the condition that the graphical solutions obtained by using the two software tools agree with each other The OrCAD PSpice is introduced in the Appendix However the portion of MATLAB and PSpice is kept not large lest the readers should be addicted to just using the software and tempted to neglect the importance of the basic circuit theory 4 We make each example show something different from other examples so that readers can efficiently acquire the essential circuit analysis techniques and gain insights into the various types of circuits On the other hand instead of repeating similar exercise problems we make most exercise problems arouse readers interest in practical application or help form a view for circuit application and design 5 For representative examples the analytical solutions are presented together with the results of MATLAB analysis close to the theory and PSpice simulation close to the experiment in the form of trinity We are sure that this style of presentation will interest many students attracting their attention to the topics on circuits efficiently 6 Unlike most circuit books with a similar title our book deals with positive feedback op amp circuits as

well as negative feedback op amp circuits *Circuit Analysis with PSpice* Nassir H. Sabah,2017-04-21 Electric circuits and their electronic circuit extensions are found in all electrical and electronic equipment including household equipment lighting heating air conditioning control systems in both homes and commercial buildings computers consumer electronics and means of transportation such as cars buses trains ships and airplanes Electric circuit analysis is essential for designing all these systems Electric circuit analysis is a foundation for all hardware courses taken by students in electrical engineering and allied fields such as electronics computer hardware communications and control systems and electric power This book is intended to help students master basic electric circuit analysis as an essential component of their professional education Furthermore the objective of this book is to approach circuit analysis by developing a sound understanding of fundamentals and a problem solving methodology that encourages critical thinking **Transmission Lines in Digital and Analog Electronic Systems** Clayton R. Paul,2011-01-11 In the last 30 years there have been dramatic changes in electrical technology yet the length of the undergraduate curriculum has remained four years Until some ten years ago the analysis of transmission lines was a standard topic in the EE and CpE undergraduate curricula Today most of the undergraduate curricula contain a rather brief study of the analysis of transmission lines in a one semester junior level course on electromagnetics In some schools this study of transmission lines is relegated to a senior technical elective or has disappeared from the curriculum altogether This raises a serious problem in the preparation of EE and CpE undergraduates to be competent in the modern industrial world For the reasons mentioned above today s undergraduates lack the basic skills to design high speed digital and high frequency analog systems It does little good to write sophisticated software if the hardware is unable to process the instructions This problem will increase as the speeds and frequencies of these systems continue to increase seemingly without bound This book is meant to repair that basic deficiency *Electrical Engin Hdbk The* Richard C. Dorf,1993-04-03 A comprehensive source of electrical engineering information this text features a complete section devoted to key mathematical formulae concepts definitions and derivatives It also provides complete descriptions of select US and international professional and academic societies **Transmission Lines in Digital Systems for EMC Practitioners** Clayton R. Paul,2011-10-24 This is a brief but comprehensive book covering the set of EMC skills that EMC practitioners today require in order to be successful in high speed digital electronics The basic skills in the book are new and weren t studied in most curricula some ten years ago The rapidly changing digital technology has created this demand for a discussion of new analysis skills particularly for the analysis of transmission lines where the conductors that interconnect the electronic modules have become electrically large longer than a tenth of a wavelength which are increasingly becoming important Crosstalk between the lines is also rapidly becoming a significant problem in getting modern electronic systems to work satisfactorily Hence this text concentrates on the modeling of electrically large connection conductors where previously used Kirchhoff s voltage and current laws and lumped circuit modeling have become obsolete because of the increasing

speeds of modern digital systems This has caused an increased emphasis on Signal Integrity Until as recently as some ten years ago digital system clock speeds and data rates were in the hundreds of megahertz MHz range Prior to that time the lands on printed circuit boards PCBs that interconnect the electronic modules had little or no impact on the proper functioning of those electronic circuits Today the clock and data speeds have moved into the low gigahertz GHz range

PSPICE and MATLAB for Electronics John Okyere Attia,2010-06-23 Used collectively PSPICE and MATLAB are unsurpassed for circuit modeling and data analysis PSPICE can perform DC AC transient Fourier temperature and Monte Carlo analysis of electronic circuits with device models and subsystem subcircuits MATLAB can then carry out calculations of device parameters curve fitting numerical integration nume The Electronic Design Automation Handbook Dirk Jansen,2010-02-23 When I attended college we studied vacuum tubes in our junior year At that time an average radio had ve vacuum tubes and better ones even seven Then transistors appeared in 1960s A good radio was judged to be one with more thententransistors Latergoodradioshad15 20transistors and after that everyone stopped counting transistors Today modern processors runing personal computers have over 10milliontransistorsandmoremillionswillbeaddedevery year The difference between 20 and 20M is in complexity methodology and business models Designs with 20 tr sistors are easily generated by design engineers without any tools whilst designs with 20M transistors can not be done by humans in reasonable time without the help of Prof Dr Gajski demonstrates the Y chart automation This difference in complexity introduced a paradigm shift which required sophisticated methods and tools and introduced design automation into design practice By the decomposition of the design process into many tasks and abstraction levels the methodology of designing chips or systems has also evolved Similarly the business model has changed from vertical integration in which one company did all the tasks from product speci cation to manufacturing to globally distributed client server production in which most of the design and manufacturing tasks are outsourced

Right here, we have countless books **Schematic Capture With Cadence Pspice** and collections to check out. We additionally present variant types and after that type of the books to browse. The all right book, fiction, history, novel, scientific research, as capably as various new sorts of books are readily genial here.

As this Schematic Capture With Cadence Pspice, it ends happening instinctive one of the favored book Schematic Capture With Cadence Pspice collections that we have. This is why you remain in the best website to see the amazing ebook to have.

https://pinsupreme.com/data/book-search/fetch.php/Los_Cachorros_Los_Jefes.pdf

Table of Contents Schematic Capture With Cadence Pspice

1. Understanding the eBook Schematic Capture With Cadence Pspice
    - The Rise of Digital Reading Schematic Capture With Cadence Pspice
    - Advantages of eBooks Over Traditional Books
2. Identifying Schematic Capture With Cadence Pspice
    - Exploring Different Genres
    - Considering Fiction vs. Non-Fiction
    - Determining Your Reading Goals
3. Choosing the Right eBook Platform
    - Popular eBook Platforms
    - Features to Look for in an Schematic Capture With Cadence Pspice
    - User-Friendly Interface
4. Exploring eBook Recommendations from Schematic Capture With Cadence Pspice
    - Personalized Recommendations
    - Schematic Capture With Cadence Pspice User Reviews and Ratings
    - Schematic Capture With Cadence Pspice and Bestseller Lists
5. Accessing Schematic Capture With Cadence Pspice Free and Paid eBooks
    - Schematic Capture With Cadence Pspice Public Domain eBooks

- Schematic Capture With Cadence Pspice eBook Subscription Services
- Schematic Capture With Cadence Pspice Budget-Friendly Options

6. Navigating Schematic Capture With Cadence Pspice eBook Formats
   - ePub, PDF, MOBI, and More
   - Schematic Capture With Cadence Pspice Compatibility with Devices
   - Schematic Capture With Cadence Pspice Enhanced eBook Features
7. Enhancing Your Reading Experience
   - Adjustable Fonts and Text Sizes of Schematic Capture With Cadence Pspice
   - Highlighting and Note-Taking Schematic Capture With Cadence Pspice
   - Interactive Elements Schematic Capture With Cadence Pspice
8. Staying Engaged with Schematic Capture With Cadence Pspice
   - Joining Online Reading Communities
   - Participating in Virtual Book Clubs
   - Following Authors and Publishers Schematic Capture With Cadence Pspice
9. Balancing eBooks and Physical Books Schematic Capture With Cadence Pspice
   - Benefits of a Digital Library
   - Creating a Diverse Reading Collection Schematic Capture With Cadence Pspice
10. Overcoming Reading Challenges
    - Dealing with Digital Eye Strain
    - Minimizing Distractions
    - Managing Screen Time
11. Cultivating a Reading Routine Schematic Capture With Cadence Pspice
    - Setting Reading Goals Schematic Capture With Cadence Pspice
    - Carving Out Dedicated Reading Time
12. Sourcing Reliable Information of Schematic Capture With Cadence Pspice
    - Fact-Checking eBook Content of Schematic Capture With Cadence Pspice
    - Distinguishing Credible Sources
13. Promoting Lifelong Learning
    - Utilizing eBooks for Skill Development
    - Exploring Educational eBooks

14. Embracing eBook Trends
    - Integration of Multimedia Elements
    - Interactive and Gamified eBooks

Schematic Capture With Cadence Pspice Introduction

In the digital age, access to information has become easier than ever before. The ability to download Schematic Capture With Cadence Pspice has revolutionized the way we consume written content. Whether you are a student looking for course material, an avid reader searching for your next favorite book, or a professional seeking research papers, the option to download Schematic Capture With Cadence Pspice has opened up a world of possibilities. Downloading Schematic Capture With Cadence Pspice provides numerous advantages over physical copies of books and documents. Firstly, it is incredibly convenient. Gone are the days of carrying around heavy textbooks or bulky folders filled with papers. With the click of a button, you can gain immediate access to valuable resources on any device. This convenience allows for efficient studying, researching, and reading on the go. Moreover, the cost-effective nature of downloading Schematic Capture With Cadence Pspice has democratized knowledge. Traditional books and academic journals can be expensive, making it difficult for individuals with limited financial resources to access information. By offering free PDF downloads, publishers and authors are enabling a wider audience to benefit from their work. This inclusivity promotes equal opportunities for learning and personal growth. There are numerous websites and platforms where individuals can download Schematic Capture With Cadence Pspice. These websites range from academic databases offering research papers and journals to online libraries with an expansive collection of books from various genres. Many authors and publishers also upload their work to specific websites, granting readers access to their content without any charge. These platforms not only provide access to existing literature but also serve as an excellent platform for undiscovered authors to share their work with the world. However, it is essential to be cautious while downloading Schematic Capture With Cadence Pspice. Some websites may offer pirated or illegally obtained copies of copyrighted material. Engaging in such activities not only violates copyright laws but also undermines the efforts of authors, publishers, and researchers. To ensure ethical downloading, it is advisable to utilize reputable websites that prioritize the legal distribution of content. When downloading Schematic Capture With Cadence Pspice, users should also consider the potential security risks associated with online platforms. Malicious actors may exploit vulnerabilities in unprotected websites to distribute malware or steal personal information. To protect themselves, individuals should ensure their devices have reliable antivirus software installed and validate the legitimacy of the websites they are downloading from. In conclusion, the ability to download Schematic Capture With Cadence Pspice has transformed the way we access information. With the convenience, cost-effectiveness, and accessibility it offers, free PDF downloads have

become a popular choice for students, researchers, and book lovers worldwide. However, it is crucial to engage in ethical downloading practices and prioritize personal security when utilizing online platforms. By doing so, individuals can make the most of the vast array of free PDF resources available and embark on a journey of continuous learning and intellectual growth.

FAQs About Schematic Capture With Cadence Pspice Books

How do I know which eBook platform is the best for me? Finding the best eBook platform depends on your reading preferences and device compatibility. Research different platforms, read user reviews, and explore their features before making a choice. Are free eBooks of good quality? Yes, many reputable platforms offer high-quality free eBooks, including classics and public domain works. However, make sure to verify the source to ensure the eBook credibility. Can I read eBooks without an eReader? Absolutely! Most eBook platforms offer webbased readers or mobile apps that allow you to read eBooks on your computer, tablet, or smartphone. How do I avoid digital eye strain while reading eBooks? To prevent digital eye strain, take regular breaks, adjust the font size and background color, and ensure proper lighting while reading eBooks. What the advantage of interactive eBooks? Interactive eBooks incorporate multimedia elements, quizzes, and activities, enhancing the reader engagement and providing a more immersive learning experience. Schematic Capture With Cadence Pspice is one of the best book in our library for free trial. We provide copy of Schematic Capture With Cadence Pspice in digital format, so the resources that you find are reliable. There are also many Ebooks of related with Schematic Capture With Cadence Pspice. Where to download Schematic Capture With Cadence Pspice online for free? Are you looking for Schematic Capture With Cadence Pspice PDF? This is definitely going to save you time and cash in something you should think about. If you trying to find then search around for online. Without a doubt there are numerous these available and many of them have the freedom. However without doubt you receive whatever you purchase. An alternate way to get ideas is always to check another Schematic Capture With Cadence Pspice. This method for see exactly what may be included and adopt these ideas to your book. This site will almost certainly help you save time and effort, money and stress. If you are looking for free books then you really should consider finding to assist you try this. Several of Schematic Capture With Cadence Pspice are for sale to free while some are payable. If you arent sure if the books you would like to download works with for usage along with your computer, it is possible to download free trials. The free guides make it easy for someone to free access online library for download books to your device. You can get free download on free trial for lots of books categories. Our library is the biggest of these that have literally hundreds of thousands of different products categories represented. You will also see that there are specific sites catered to different product types or categories, brands or niches

related with Schematic Capture With Cadence Pspice. So depending on what exactly you are searching, you will be able to choose e books to suit your own need. Need to access completely for Campbell Biology Seventh Edition book? Access Ebook without any digging. And by having access to our ebook online or by storing it on your computer, you have convenient answers with Schematic Capture With Cadence Pspice To get started finding Schematic Capture With Cadence Pspice, you are right to find our website which has a comprehensive collection of books online. Our library is the biggest of these that have literally hundreds of thousands of different products represented. You will also see that there are specific sites catered to different categories or niches related with Schematic Capture With Cadence Pspice So depending on what exactly you are searching, you will be able tochoose ebook to suit your own need. Thank you for reading Schematic Capture With Cadence Pspice. Maybe you have knowledge that, people have search numerous times for their favorite readings like this Schematic Capture With Cadence Pspice, but end up in harmful downloads. Rather than reading a good book with a cup of coffee in the afternoon, instead they juggled with some harmful bugs inside their laptop. Schematic Capture With Cadence Pspice is available in our book collection an online access to it is set as public so you can download it instantly. Our digital library spans in multiple locations, allowing you to get the most less latency time to download any of our books like this one. Merely said, Schematic Capture With Cadence Pspice is universally compatible with any devices to read.

Find Schematic Capture With Cadence Pspice :

los cachorros los jefes
los indios en las clases sociales de mexico
lord of the river
los angelas without a map
lost in mongolia travels in hollywood and other foreign lands
los nombres para el bebe
lord teach me wisdom
loro di siena
lost in time
lotte in weimar roman
lords supper confessional lutheran dogmatics
lost in god rediscovering modern prayer form in traditional saints
losers ante up
los salmos oracion del pueblo de dios

lord of the dance

Schematic Capture With Cadence Pspice :

buk baibel long tok pisin png scriptures - Oct 05 2023
web sep 16 2023 html generated with haiola by ebible org 16 sep 2023 from source files dated 1 sep 2023haiola by ebible org 16 sep 2023 from source files dated 1 sep 2023
ol witnes bilong jehova ofisel web sait jw org tok pisin - Aug 23 2022
web matyu sapta 5 tok pisin baibelbible of papua new guinea
the bible in tok pisin pigeon english png - Jul 22 2022
web the tower of babel genesis 11 1 9 tok pisin bipo ol manmeri bilong graun i gat wanpela tok plestasol ol i stap long hap bilong sankamap na ol iraun nabaut na ol i kamap long wanpela ples daun longhap bilong babilonia orait ol i sindaun i stap longdispela hap
the bible in pigeon english png tok pisin - Jul 02 2023
web most popular versions buk baibel long tok pisin tpipng ebible org buk baibel long tok pisin 2008 dc tpi2008 bible society of papua new guinea select any bible
buk baibel long tok pisin pdf world english bible - Sep 04 2023
web tok pisin buk baibel long tok pisin bilong niugini tpi tpi all pdf letter size 12 point color 1966 pages tpi a4 pdf a4 size 12 point color 2173 pages tpi prt pdf 202 x 135 mm 9
tok pisin baibel apps on google play - Jun 01 2023
web tok pisin tpi mp3 audio scripture buk baibel tpi mp3 zip contains all of the scripture audio files below tpi mp3 zip i gat olgeta fail i stap tanblo insait
matyu sapta 5 tok pisin baibel youtube - Jun 20 2022
web tok pisin bible with dc buku baibel tok pisin is the language of papua new guinea
buk baibel long tok pisin tpipng bible com - Jan 28 2023
web buk baibel long tok pisin tok pisin dc bible bible society of papua new guinea
buk baibel long tok pisin world english bible - Sep 23 2022
web the bible in tok pisin pigeon english png buk baibel long tok pisin tpipng buk baibel long tok pisin 2008 dc tpi2008 hundreds of versions in 1600 different
tok pisin bible with dc bibleinmylanguage - Apr 18 2022
web tok pisin buk baibel long tok pisin tok pisin buk baibel long tok pisin topura wedau topura wedau mark tubetube

bwanabwana buki tabu beyabeyana tubetube bwanabwana buki tabu waluwaluna tuma irumu anutu täŋo man tungag akus ro na palatung tanginang ani iesu karisto uare uare bible ubir

tower of babel in tok pisin omniglot - May 20 2022

web tok pisin baibel for android free in english v 1 0 1 4 6 0 security status free download for android softonic review a free program for android by mits app world the holy

tok pisin tpi mp3 audio png scriptures - Apr 30 2023

web official status along with english and hiri motu tok pisin is one of the three official languages of papua new guinea it is frequently the language of debate in the national

tpi2008 bible buk baibel long tok pisin 2008 dc youversion - Nov 25 2022

web buk baibel long tok pisin bilong niugini god i gat wanpela pikinini tasol i stap tasol god i laikim tumas olgeta manmeri bilong graun olsem na em i givim dispela wanpela pikinini

tok pisin baibel free download and software reviews cnet - Dec 15 2021

tok pisin baibel port moresby facebook - Jan 16 2022

tok ples buk baibel bilong papua new guinea - Feb 14 2022

web buk baibel long tok pisin the holy bible with deuterocanon in the tok pisin melanesian pidgin language of papua new guinea buk baibel long tok pisin bilong niugini tok

tpipng bible buk baibel long tok pisin youversion - Dec 27 2022

web buk baibel long tok pisin 2008 dc pigeon english png listen to tpi2008 download the bible app now audio bibles pigeon english png listen to tpi2008 tok pisin

tok pisin baibel for android download - Mar 18 2022

web tok pisin baibel port moresby papua new guinea 198 likes bible in papua new guinea

tok pisin wikipedia - Feb 26 2023

web buk baibel long tok pisin pigeon english png read tpipng the holy bible with deuterocanon in the tok pisin melanesian pidgin language of papua new guinea

buk baibel long tok pisin tokplesbaibel org - Aug 03 2023

web pdf pdf crosswire sword tpi2008eb zip microsoft office word 2003 xml tpi word zip the holy bible with deuterocanon in the tok pisin melanesian pidgin language of

bible in tok pisin english apps on google play - Mar 30 2023

web tpipng audio bible listen online for free or download the youversion bible app and listen to audio bibles on your phone with the 1 rated bible app

buk baibel long tok pisin 2008 dc bible com - Oct 25 2022

web mipela i traim bes long bihainim pasin bilong jisas krais na mipela i amamas long kisim nem olsem ol kristen mipela i save yusim taim bilong mipela long helpim ol man long kisim save long baibel na kingdom bilong god mipela i save tokaut o autim tok long jehova god na kingdom bilong em olsem na mipela i kisim nem olsem ol witnes bilong

free patterns seasonal tildas world - Aug 14 2023

web free patterns seasonal tildas world patterns for christmas and easter projects please do not print and resell our free patterns shops are welcome to kit our quilts provided they use tilda fabrics and refer to tildasworld com free patterns for the explanation pyjama santa finished size 62 cm scrap angel stocking challenging

free tilda fabrics patterns tilda fabric usa - Oct 04 2022

web need some projects and pattern ideas look no further than the tilda s world blog where all things tilda come to life the best news is that the wealth of patterns available on the tilda s world blog are free no more saving your stash of tilda for that perfect project because the perfect project is waiting for you over in tilda s world

free patterns 2 tildas world - Jul 13 2023

web check out the patterns for tilda friends see all seasonal inspiration looking for something extra for christmas or easter here s a few ideas see all windy days quilt challenging you can really feel the breeze in this charming quilt playfully blowing the girl s hair and scarf and tossing leaves from the tree

free patterns collections tildas world - Sep 15 2023

web please do not print and resell our free patterns shops are welcome to kit our quilts provided they use tilda fabrics and refer to tildasworld com free patterns for the explanation happy holidays quilt beige challenging updated oct 5th what a wonderful heirloom quilt this is sure to become

tilda sewing pattern etsy singapore - Mar 29 2022

web check out our tilda sewing pattern selection for the very best in unique or custom handmade pieces from our kits how to shops

tilda bunnies sew along sew this free pattern with me - Feb 08 2023

web may 16 2022 48k views 3 years ago head on over to tilda s world to download your free pattern and lets get started tildasworld com wp content uploads 2019 01 easter bunnies pdfsha

how to make the tilda girl from tilda s world youtube - Dec 06 2022

web aug 16 2023 how to make the tilda girl from tilda s world marnae s country farmhouse 4 33k subscribers subscribe 27k

views 2 months ago here is a tutorial on how i make the tilda girl i show how to

tilda friends soft toys 10 free patterns to love - Sep 03 2022

web may 31 2023 get the 10 free tilda friends patterns cow in overalls love this gentle cow in the cutest little pair of overalls love how all the tilda designs have a distinctive look of their own don t you get the free cow pattern hare pattern

christmas birds tildas world - Mar 09 2023

web dec 8 2016 here is the christmas bird pattern you will need cardboard or a plastic sheet for templates pen fabric for the body wings tail and beak filling for the body flower stick for turning needle and thread thin cardboard for wings tail and beak fast drying craft glue small sharp scissors purls for eyes

free patterns basics tildas world - Jun 12 2023

web aug 24 2023 all patterns below are made using fabrics from our basic collections please do not print and resell our free patterns shops are welcome to kit our quilts provided they use tilda fabrics and refer to for the explanation flower vase embroidery quilt easy updated july 19th 2023

how to sew a tilda doll sew daily - Jul 01 2022

web how to sew a tilda doll learn how to sew a beautiful tilda doll complete with elegant dress and angel wings using a pattern from bestselling tilda book sew sunny homestyle sold separately prudence rogers demonstrates the method step by step ensuring your doll will come out just as beautifully

250 tilda patterns and instructions ideas sewing dolls doll patterns - Feb 25 2022

web sewing crafts sewing projects sewing ideas dress sewing patterns sewing dresses Куклы куколки пончо feb 9 2019 explore jan holland s board tilda patterns and instructions on pinterest see more ideas about

products tildas world - Jan 07 2023

web products the first tilda products two simple easter sewing kits saw the light in 1999 just after the first tilda book was published the following season the collection doubled and since then tilda has grown steadily today 120 150 new tilda products are presented each year in the tilda product range you will find products

free patterns tildas world - Oct 16 2023

web free patterns free patterns please do not print and resell our free patterns shops are welcome to kit our quilts provided they use tilda fabrics and refer to tildasworld com free patterns for the explanation

dolls and animals tildas world - May 11 2023

web 1 october 2023 sleeping animals and nature motives is the theme for this year s autumn and winter collection hibernation the designs are inspired by the arts and crafts movement with lighter elements on a dark background and a layered look perfect for autumn and winter projects

tilda doll patterns 5 free downloads from britain with love - Aug 02 2022
web may 18 2020 tilda doll pattern free download 1 to make the basic fia doll click to download the basic fia doll free pattern if you d prefer a pattern that includes the clothing scroll further down the page i ve also shared two other free fia doll patterns that include instructions on how to make their different outfits materials
every tilda pattern you ever wanted shabby art boutique - Apr 10 2023
web oct 4 2017 when you think tilda you can t go past her adorable dolls and they don t come much cuter than these little sweeties with knitted cardigans the pattern for the summer girls is in the book tilda s seaside ideas just a note on the knitted cardigans though the pattern is particularly hard to follow
tilda pattern etsy singapore - Apr 29 2022
web check out our tilda pattern selection for the very best in unique or custom handmade pieces from our sewing fibre shops
tilda dapper dachshunds downloadable pdf lovecrafts - May 31 2022
web tilda dapper dachshunds downloadable pdf is a free intermediate sewing pattern by tilda available as a downloadable pdf and includes instructions in english super fun to make this pattern could be your next masterpiece brand tilda craft sewing format downloadable pdf language english number of patterns 1 pages 7 skill level
tilda cow sew along sew this free pattern with me youtube - Nov 05 2022
web feb 13 2022 tilda cow sew along sew this free pattern with me youtube 0 00 40 12 intro tilda cow sew along sew this free pattern with me niks days 2 85k subscribers
georges hotel galata - May 17 2022
web welcome to georges hotel galata luxury boutique hotel with a french touch established in 2011 georges hotel was created and designed entirely by alex varlık and eric kamhi making use of local craftsmen knowhow and materials the façade was renovated by the renowned architect han tümertekin
the george v a legendary hotel hardcover abebooks - Dec 24 2022
web the george v became the incontrovertible stopover to those looking for luxury calm and rest after two years of a full renovation the george v combines classical and ultra modern comfort asked for by world travellers of the 21st century
george v a legendary hotel by andre bercoff alibris - Nov 22 2022
web buy george v a legendary hotel by andre bercoff online at alibris we have new and used copies available in 1 editions starting at 22 82 shop now
george v famoushotels org - Oct 22 2022
web george v in a city packed full to the rafters with top class historic hotels it can be hard to stand out the george v manages the trick however since it was bought by saudi prince al waleed and subsequently revamped it has earned a

reputation as one of the finest hotels in paris and even the world

reviews le george four seasons hôtel george v thefork - Jun 17 2022

web mar 30 2020 le george four seasons hôtel george v in paris rated 9 4 10 on thefork read diner reviews and view user photos before making a booking

the george v a legendary hotel by andré bercoff goodreads - Jul 31 2023

web the george v a legendary hotel andré bercoff 4 00 1 rating1 review want to read buy on amazon rate this book 180 pages hardcover first published march 1 2007 book details editions loading interface loading interface about the author andré bercoff

luxury hotel paris 5 star four seasons hotel george v paris - Oct 02 2023

web oct 19 2010 an art deco landmark built in 1928 four seasons hotel george v is nestled in the golden triangle of paris just off the historic champs elysees oversized suites with eiffel tower views welcome you after a day of wandering the quaint parisian streets and our three restaurants with five michelin stars among them are home to some of

four seasons hotel george v paris more than a mere palace a - Jun 29 2023

web oct 26 2023 located on the avenue of the same name at the heart of paris triangle d or and a stone s throw from the champs elysées the prestigious four seasons hotel george v paris continues living up to its legendary reputation through the majestic lobby the spectacular floral arrangements by jeff leatham usher you along to your suite

georges hotel galata vs the bank hotel istanbul tripexpert - Mar 15 2022

web both hotels are rated highly by writers on balance vault karakoy the house hotel is preferred by most reviewers compared to georges hotel galata vault karakoy the house hotel is ranked 17 in istanbul with praise from 8

george v a legendary hotel help environment harvard edu - Jul 19 2022

web george v a legendary hotel legendary locals of wheeling west virginia aug 30 2022 from its founding as a frontier outpost through its role as the birthplace of a new state during the civil war and its evolution into a manufacturing center wheeling has been home to a fascinating array of personalities the old legends

the george v a legendary hotel hardcover 1 mar 2007 - Aug 20 2022

web buy the george v a legendary hotel by bercoff andre isbn 9782732435688 from amazon s book store free uk delivery on eligible orders

george v a legendary hotel andre bercoff google books - Mar 27 2023

web george v a legendary hotel author andre bercoff publisher editions de la martinière 2007 isbn 2732435686 9782732435688 export citation bibtex endnote refman

the four seasons hotel george v is a history lesson in regal design - Sep 20 2022

web apr 20 2014 in paris the legendary hotel george v by the four seasons is steeped in rich french history the hotel features an opulent design both in the rooms and throughout the building that harkens back to a bygone era of parisian culture

four seasons hotel george v a paris legend and with good - Apr 27 2023

web oct 28 2016 the four seasons hotel george v is one of the most legendary and renowned in all of paris and the world and even though a hotel with such a sparkling a reputation can easily rest on its laurels a recent stay at the invitation of the hotel confirmed that this gem really is something special

the george v a legendary hotel amazon com - May 29 2023

web mar 1 2007 the george v a legendary hotel bercoff andre on amazon com free shipping on qualifying offers the george v a legendary hotel

more than a mere palace a legend four seasons hotel george v - Feb 23 2023

web located on the avenue of the same name at the heart of paris the prestigious four seasons hotel george v paris continues living up to its legendary reputat

the four seasons george v palace legendary status - Sep 01 2023

web jan 11 2023 built in 1928 in an art déco style the four seasons hotel george v paris can be found a stone s throw from the champs Élysées guests can stay in one of its 244 rooms and suites admire an extensive collection of artwork and dine at one of its three fine dining restaurants which between them share five michelin stars in the 2017 guide a

the george v a legendary hotel by patricia lepic - Feb 11 2022

web sep 16 2023 the george v a legendary hotel by patricia lepic four seasons the gee v deluxe room paris by matteo minetto virtual tour 4k 3d legendary collectors 3 the duke of philately david baghdad s legendary al rasheed hotel reopens your middle buddha bar george v eatertainment london s legendary savoy hotel reopens its elegant doors

the four seasons hotel george v the true spirit of luxury - Jan 25 2023

web dec 12 2013 just off the champs elysees the four seasons hotel george v paris is superbly located in the heart of the most fashionable quarter of paris opened in 1928 the george v has always been a legendary hotel of paris in an anglo french style the george v is admired for its unique identity mixing intimate ambiance and french elegance

georges hotel galata istanbul updated 2023 prices booking com - Apr 15 2022

web there are live jazz performances 3 days a week sunday brunch is legendary at georges located in the trendy district galata the hotel is within 5 minutes walk of istiklal avenue the galata tower and the hip karakoy neighborhood the attractions and sights of the historical old city are just 1 2 mi away istanbul airport is 31 mi away